DocuSign Envelope ID: D25BF417-50CB-4E3D-B866-D685803946CC

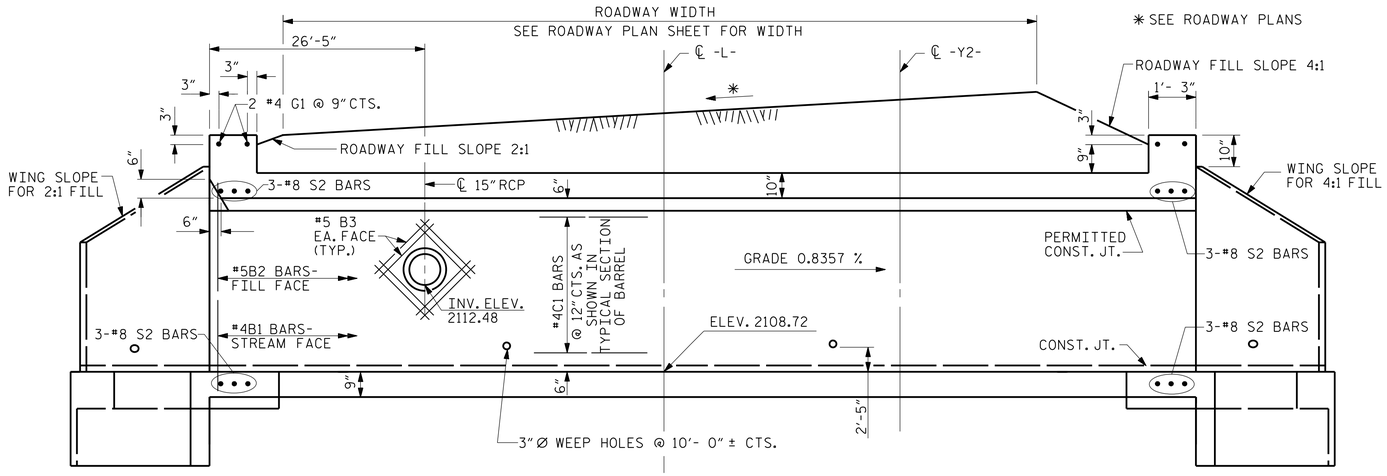

CULVERT SECTION NORMAL TO ROADWAY

NOTE:

CUT REINFORCING STEEL AS NECESSARY TO PROVIDE 2" MIN. CLEAR TO 15" RCP.

THE 15" Ø PIPE THROUGH THE SIDEWALL OF THE CULVERT SHALL BE LOCATED BY THE ENGINEER.

FOR DETAIL OF REINFORCING AROUND PIPE SEE SHEET 6 OF 7.

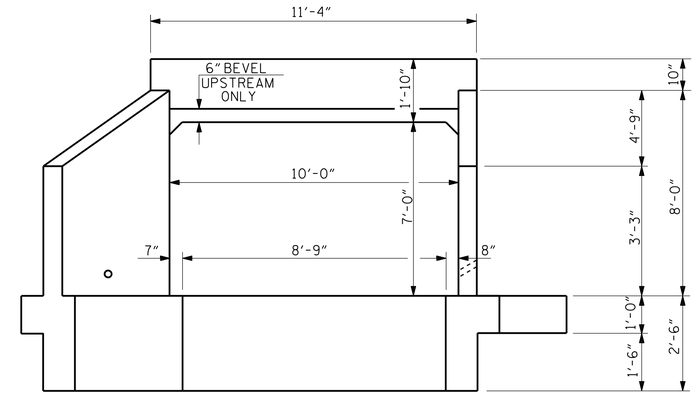

END ELEVATION

INLET END

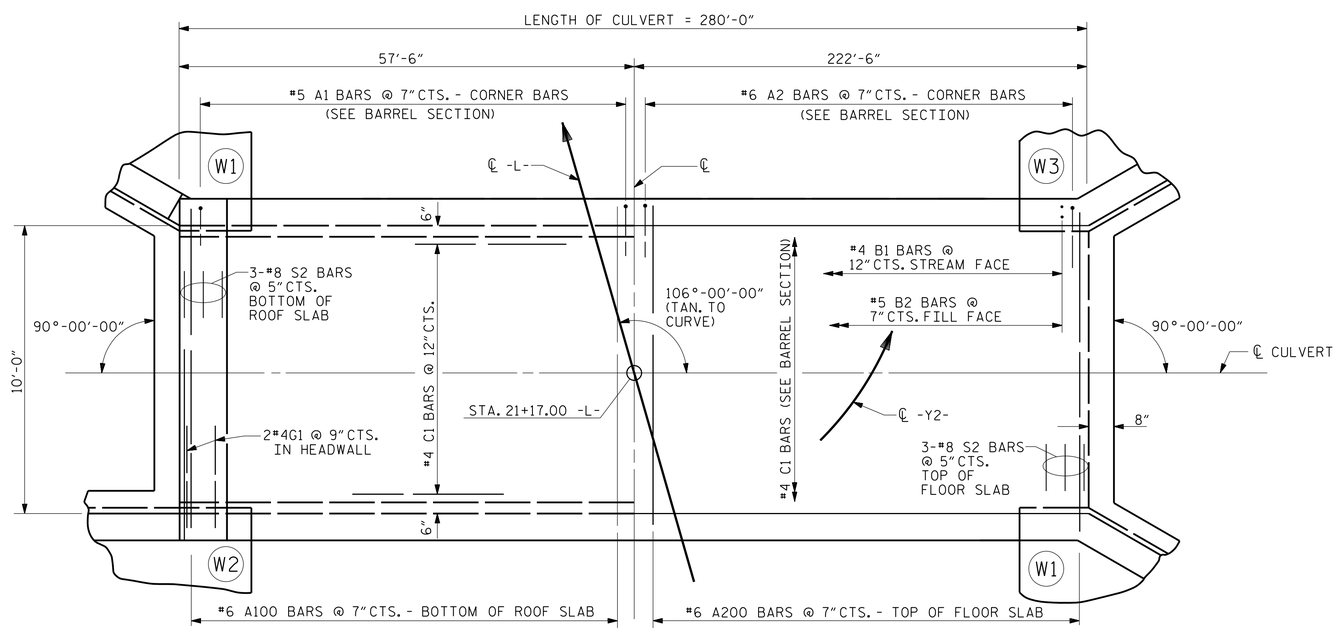

PART PLAN ROOF SLAB

PART PLAN FLOOR SLAB

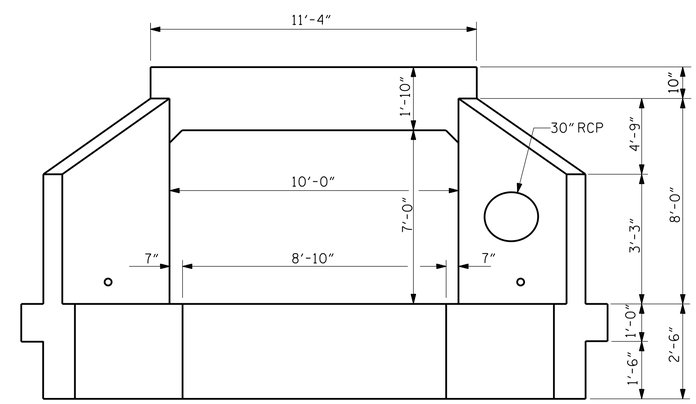

END ELEVATION

OUTLET END

PROJECT NO. U-5105

HENDERSON COUNTY

STATION: 21+17.00 -L-

SHEET 3 OF 7

STATE OF NORTH CAROLINA
DEPARTMENT OF TRANSPORTATION
RALEIGH

BARREL STANDARD SINGLE 10 FT. X 7 FT. CONCRETE BOX CULVERT 106° SKEW

1971

NORTH CAROLINA PROFESSIONAL ENGINEER L. KEVIN AUSTIN

Digitally signed by L. Kevin Austin
DN: cn=L. Kevin Austin, o=CALYX, ou=Engineering, email=kevin.austin@calyxengineers.com, c=US
Date: 2018.02.27 10:10:00 -05'00'

2/27/2018

PLANS PREPARED BY:

CALYX ENGINEERS + CONSULTANTS
6750 TRYON ROAD
CARY, NC 27518
phone: 919.851.1912
CALYXengineers.com
NC License # F-1333

DOCUMENT NOT CONSIDERED FINAL UNLESS ALL SIGNATURES COMPLETED

REVISIONS						
NO.	BY:	DATE:	NO.	BY:	DATE:	
1			3			
2			4			

SHEET NO. C-3

TOTAL SHEETS 7

STD. NO. CB11

ASSEMBLED BY : W. B. ALLEN	DATE : 1/17	SPECIAL	
CHECKED BY : Z. H. BROWN	DATE : 2/17		
DRAWN BY : R. WRIGHT	DATE : AUG. 1989	STANDARD	
CHECKED BY : A.R. BISSETTE	DATE : AUG. 1989		

REVISED 8-28-92 BY E.L.R. CHECKED BY G.R.P.
REVISED 8-22-89 BY A.R.B. CHECKED BY C.R.K.
REDRAWN 8-22-1989
REVISED 11-19-99 BY M.M. CHECKED BY R.W.W.

2/15/2018 11:33:28 AM R:\Structures\U-5105_SMU_CU_03.dgn